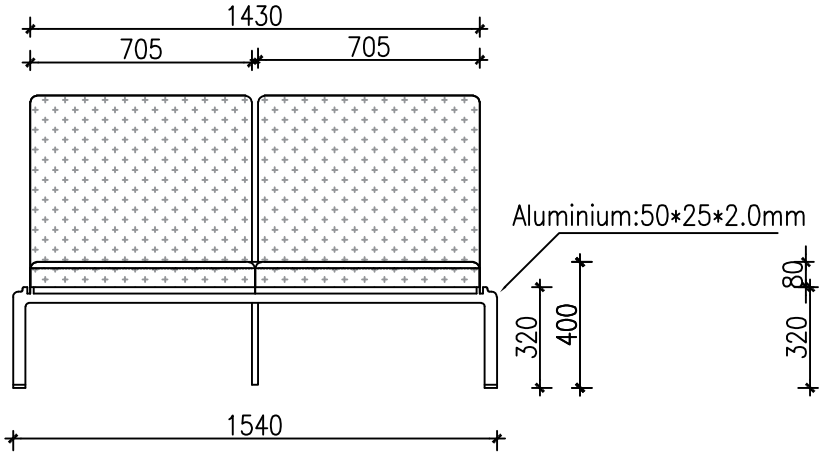

A Front view
正视图 SCALE 1:15

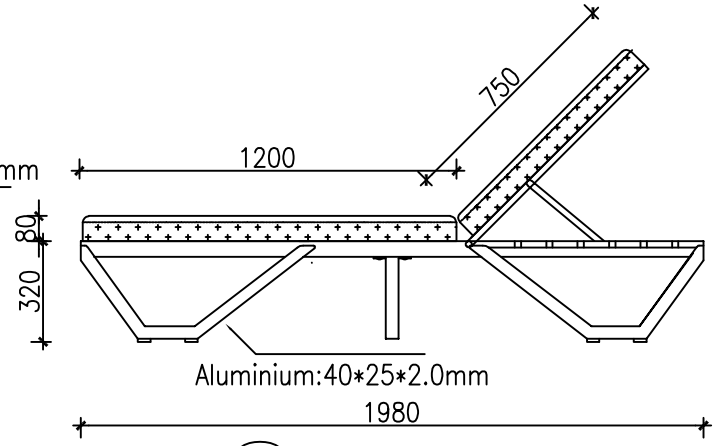

B Side view
侧视图 SCALE 1:15

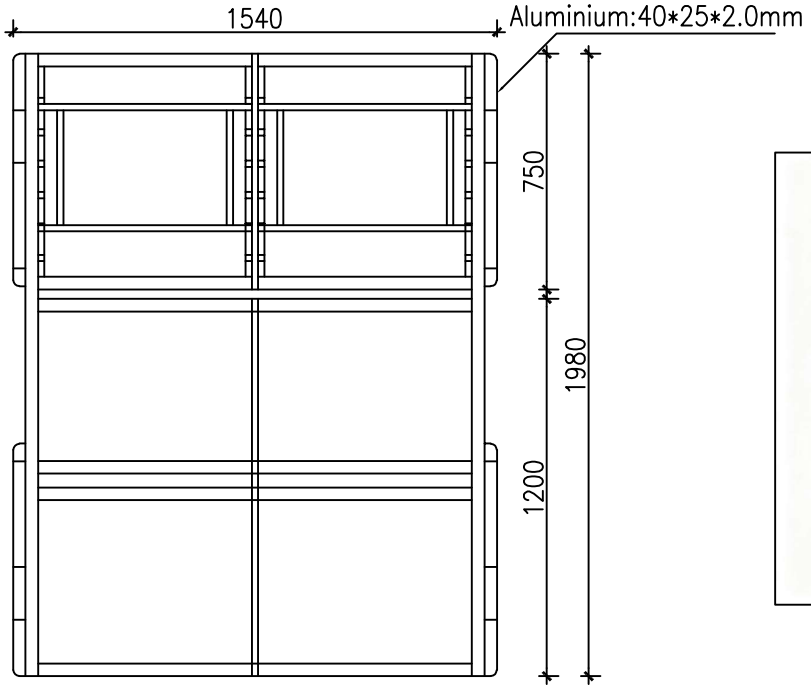

C Top view
俯视图 SCALE 1:15

Project Name:	
Item Number:	
Product Name:	Double Sun Lounger
Dimension:	W1980xD1540xH320mm
QTY:	
Main Material:	
Date:	
Version:	